2027 Interwire Exhibitor Guide

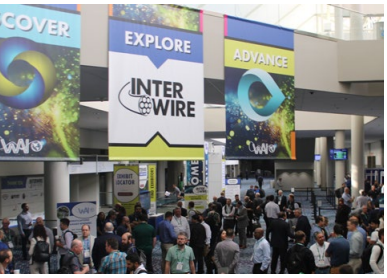

INTERWIRE
CONFERENCE & TRADE EXPOSITION
by The Wire Association International



SAFETY STARTS HERE. *SAFER WORK. STRONGER INDUSTRY.*



May 4-6, 2027

Georgia World Congress Center
Atlanta, Georgia, USA
interwire27.com

ORGANIZED BY: THE WIRE ASSOCIATION INTERNATIONAL, INC.

Table of Contents

Welcome Message ..... Page 3

About the Organizer ..... Page 4

Getting Started ..... Page 5

Show Schedule, Move-In and Booth Dismantle Times ..... Page 6

Exhibitor Responsibilities ..... Page 7

Exhibitor Resource Center and ExhibitorPro ..... Page 8

Helpful Tips ..... Page 9

Floorplan and Booth Listing Deadlines ..... Page 10

General Rules & Guidelines ..... Page 11–14

Booth Configurations ..... Page 15–17

- Linear and Perimeter Booth Layout ..... Page 15
- Island and Split Island Booth Layout ..... Page 16
- Double-Deck Displays and Towers Layout ..... Page 17

Hanging Signs ..... Page 18

Exhibitor Appointed Contractors ..... Page 19

Insurance Coverage ..... Page 20

Safety ..... Page 21–22

Welcome Message

Dear Interwire Exhibitor,

Thank you for your decision to exhibit at the Wire Association's biennial Interwire Conference & Trade Exposition. Our goal is to make your planning process as seamless as possible.

Please review this guide carefully to help you and your team prepare for Interwire and to ensure a smooth and successful exhibiting experience.

This guide provides an ***overview*** of important information including event schedules, move-in and move-out procedures, booth regulations, safety requirements, shipping, and other operational details.

However, for ***detailed information*** you should access the following exhibitor management resources regularly for the most current forms, deadlines, and service options:

- **The Exhibitor Resource Center**
- **The ExhibitorPro Portal**

The ExhibitorPro portal is maintained by Shepard Exposition Services (SES), the General Service Contractor for Interwire. It houses all detailed service orders, vendor contacts, and operational updates to support your planning. You can access ExhibitorPro through the Exhibitor Resource Center.

If at any time you have questions or require assistance, please contact interwire@wirenet.org or your sales representative.

We appreciate your partnership and look forward to a successful event together!

- *The Wire Association International Staff*

The Wire Association International Staff

Steve Fetteroll
Executive Director

Anna Bzowski
Director of International Sales & Business Development

Mark Del Franco
Wire Journal International Editor-in-Chief

Sheila Kuever
Controller

Vanessa Lewis
Project Manager

John Markowski
Director of Education

Mark Marselli
Wire Journal International Contributing Editor

Janice Swindells
Director of Marketing & Corporate Communications

Chuck Szymaszek
Director of Information Technology

Shannon Timme
Director of Sales

THE WIRE ASSOCIATION INTERNATIONAL, INC.

About the Organizer

The Wire Association International, Inc.

+1-203-453-2777 | wirenet.org | interwire@wirenet.org

Headquartered in Madison, Connecticut, USA

The Wire Association International (WAI), Inc., founded in 1930, is a worldwide technical society for wire and cable industry professionals dedicated to the promotion, collection, and dissemination of technical, manufacturing, and general business information and trends in the industry. Throughout the year WAI organizes and produces events such as the Interwire Conference & Trade Exposition and the Wire Expo Operations Summit & Exhibits, an online Industry Search and annual International Technical Conferences. Its publications and technical products include Wire Journal International (WJI), the annual WJI Reference Guide, Off-the-Press Newsletter, as well as on-demand and in-person courses, workshops, and webinars.

Mission

To serve the technical, manufacturing and general business segments of the global wire and cable industry.

Vision

To be the most valued, critical resource for the global wire and cable industry.

Visit The Wire Association International's website wirenet.org for information on each of the organization's four pillars:

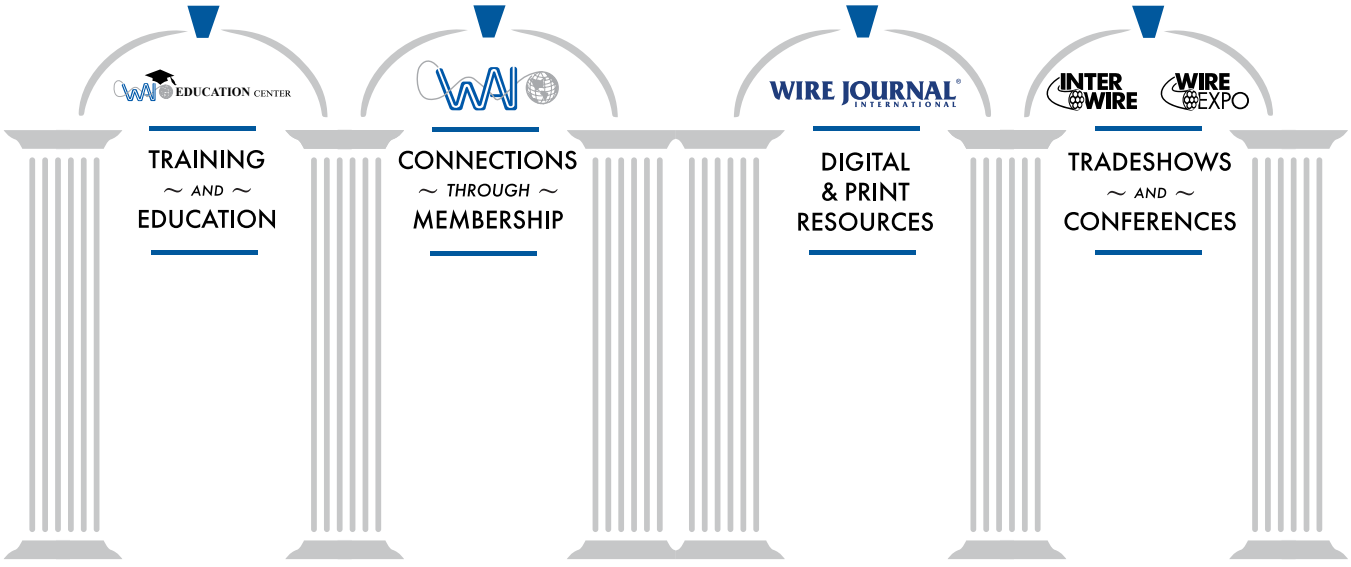

Getting Started

Before planning your exhibit, take a few moments to review and complete the information below.

- Verify your Primary Booth Contact information;
- Review the online planning timeline and important deadlines;
- Share this guide with your exhibit team and external partners assisting with your exhibit; and
- Review the Certificate of Insurance (COI) requirements and submission guidelines.

Primary Booth Contact

Your Primary Booth Contact is the individual who submitted the Interwire exhibit space application and contract. This person will receive important communications related to your exhibit space and event planning.

Need to make a change?

If your company's Primary Booth Contact changes, you can update this information at any time through the Exhibitor Resource Center (covered later in this guide).

Show Schedule, Move-In & Booth Dismantle Times



BOOTH SET UP

Monday May 3
8:00 a.m. - 5:00 p.m.

Tuesday May 4
8:00 AM - 9:30 a.m.

EXHIBIT HOURS

Tuesday May 4
10:00 a.m. – 5:00 p.m.

Wednesday May 5
10:00 a.m. - 5:00 p.m.

Thursday May 6
10:00 a.m. - 3:00 p.m.

BOOTH DISMANTLE

Thursday May 6
3:00 p.m. - 11:00 p.m.

Friday May 7
8:00 a.m. - 5:00 p.m.

Saturday May 8
8:00 a.m. - 12:00 p.m.
Freight Reroute: 12:00 p.m.

To review the Interwire conference schedule, visit interwire27.com.

Note:
Schedule is subject to change.

Event Location and Entry Points

Georgia World Congress Center (GWCC)
Building A

285 Andrew Young International Blvd NW, Atlanta, GA, USA 30313

Red Deck Parking

Address: 103 Mangum Street SW, Atlanta, GA 30313

Interactive Arrival Map:
https://www.gwcc.com/parking/

Interactive Building Map:
https://www.gwcc.com/interactive-floorplan/

General Exhibitor Move-In

Monday May 3, 2027: 8:00 a.m. - 5:00 p.m.

Buildup and final construction completed by: 5:00 p.m.

All booth materials and empties must be out of aisles by: 5:00 p.m.

Targeted Move-in Time

Booths 400 sq. ft. and larger are assigned a targeted move-in time. Freight deliveries require an appointment. The exhibitor's Primary Contact will be contacted by the General Service Contractor, SES, to schedule and confirm a move-in time. This process helps coordinate freight delivery, equipment installation, carpet installation, and other booth preparation services. Move-in times are assigned based on booth location and setup requirements.

Exhibitor Responsibilities

Show management is committed to maintaining a safe and healthy event environment. Exhibitors and their appointed contractors are expected to uphold the same standards throughout all phases of the exhibition.

Exhibitors are responsible for ensuring, as far as reasonably practicable, the health, safety, and welfare of their employees, contractors, visitors, and any other persons affected by their activities during the event and must take all appropriate measures to prevent accidents, injuries, and unsafe working conditions, including providing suitable information, instruction, supervision, and training when necessary.

Guidelines for booth construction are included in the next sections. Please be sure to follow the guidelines according to the booth configuration you have reserved.

- Any display that Show Management deems unprofessional in appearance will not be permitted.
- All exposed parts of exhibitor's display must be finished so as not to be objectionable to other exhibitors or Show Management. Any objectionable feature of exhibitor's display may be draped or modified at the sole discretion of Show Management and the cost thereof billed to and paid by the exhibitor.
- All machinery must have drip pads.
- Backs of walls of any structure must have clean and finished surfaces and no exposed metal frames.
- Wires must be tidied or hidden, and floor trailing wires must be taped down correctly so as not to cause a trip hazard.
- No part of any stand or exhibit, including signs, lighting fixtures, structural elements, or decorative features, should extend beyond your contracted floor space.
- Decorations may not be taped, nailed, tacked, or otherwise fastened to ceilings, painted surfaces, columns, or fabric of decorative walls in the Georgia World Congress Center.
- Adhesive-backed decals and stickers may not be distributed anywhere on the premises.
- Glitter and confetti may not be used in the building.

Early Dismantling Policy

Early dismantling of exhibits is prohibited. All exhibits must remain fully staffed and operational until the official close of the exposition to provide the best possible experience for attendees and fellow exhibitors.

Exhibitors may not begin dismantling, packing, or removing exhibit materials before the official move-out announcement. WAI reserves the right to prevent the dismantling or removal of any exhibit prior to that time. Failure to comply with this policy may result in the exhibitor being prohibited from participating in future WAI organized events.

Exhibitor Resource Center & ExhibitorPro

Exhibitor Resource Center (Map Your Show)	ExhibitorPro (Shepard Exposition Services)
Your online planning hub.	Your portal for exhibitor services and vendor orders.
Log in to manage your exhibitor profile, booth information, marketing tools, registration, important announcements, and access planning resources.	Access order forms and purchase services including furnishings, carpet, electrical, internet, labor, material handling, shipping, and other exhibitor services provided by Shepard Exposition Services.
Use this for: • Central hub for exhibitor planning and resources • Access exhibitor manuals, deadlines, and forms • Submit company, booth, and product information • Order booth services and event supplies • Manage financial, contractual, and marketing resources • Update exhibitor profiles and listings • Access marketing and promotional tools	**Use this for:** • Furniture orders • Carpet • Electrical services • Internet • Shipping & material handling • Labor orders • Cleaning services • Booth services

Helpful Tips

Bookmark Your Resources

We recommend bookmarking the Interwire Exhibitor Resource Center, ExhibitorPro, and interactive floorplan for quick and convenient access throughout the planning process.

You may access the floorplan through the Exhibitor Resource Center or the event's main website, interwire27.com.

Watch Your Email

Important exhibitor communications, service agreements, reminders, and planning updates will be sent on behalf of Interwire through both the Exhibitor Resource Center and ExhibitorPro. To ensure you don't miss important information, please add these systems to your safe sender list and check your spam or junk folder regularly.

Protect Yourself from Solicitation Scams. Unfortunately, exhibitors are frequently targeted by unauthorized companies claiming to represent Interwire. These solicitations may involve hotel reservations, attendee or mailing lists, booth contractors, freight services, or other exhibitor-related offerings.

Remember:

- If you receive a message and are unsure whether it is legitimate, please contact interwire@wirenet.org before responding. We're happy to verify whether the communication is official. When in doubt, ask first.
- To book hotel accommodation only through the official housing link provided by Interwire.
- Official communications may come from The Wire Association International as well as its authorized event partners and service providers.

Floorplan & Booth Listing Deadlines

Floorplan

WAI reserves the right to modify, revise, or reconfigure the exhibition floor plan and booth layout at any time as deemed necessary for the overall success, safety, and operation of the event. Such changes may include, but are not limited to, adjustments to booth locations, aisle configurations, feature areas, and floor plan design.

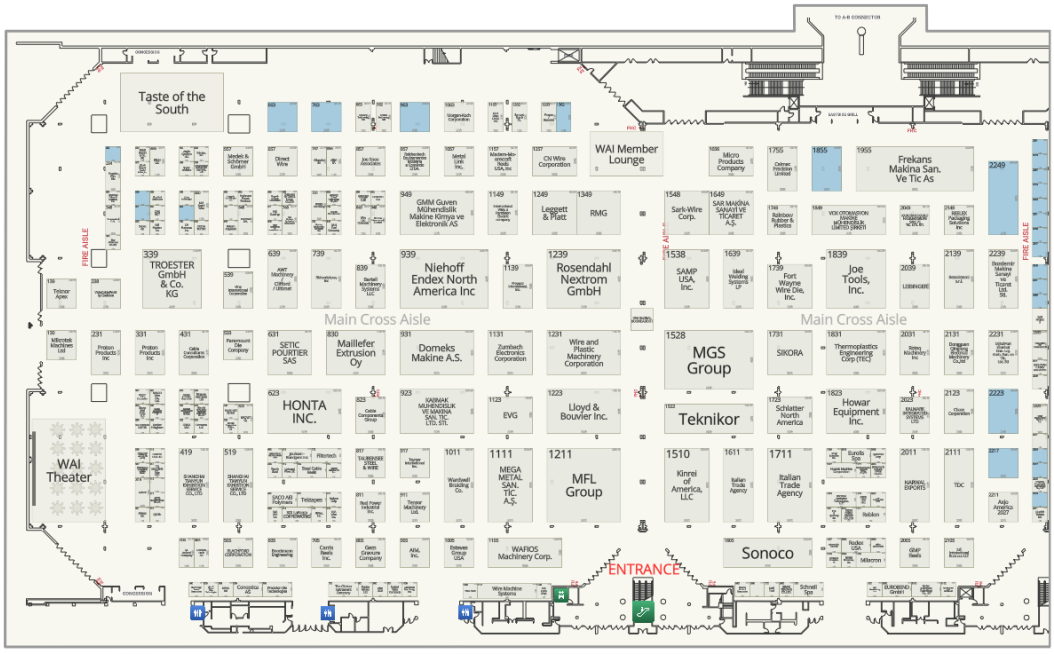

Your booth listing appears in the *Wire Journal International* magazine, the *Official Interwire Show Program*, event website and mobile app, and on the floorplan.

Access the Exhibitor Resource Center to make updates to your exhibitor company profile/booth listing.



March Wire Journal International

Interwire Preview

Deadline: Monday, February 8, 2027

April Wire Journal International

Interwire Update

Deadline: Monday, March 8, 2027

Official INTERWIRE Show Program

Deadline: Monday, March 8, 2027

General Rules & Guidelines

Listed alphabetically by topic.

Booth Construction Jurisdiction

Construction of a booth, stand or exhibit may be made by either employees of the exhibiting company, the official show contractor or by an authorized independent contractor. All groups are required to follow all show rules concerning construction and scheduling.

Children

Children under the age of eighteen will not be permitted on the show floor during move-in or move-out. Children will be admitted during normal show hours with adult supervision.

Demonstrations or Entertainment

If you are planning to run machinery in your exhibit, you must submit the following information to floormanager@wirenet.org by March 15, 2027.

- Onsite operative information;
- Weight & dimensions; and
- Images & specifications including any safety measures such as automatic cut-offs and compliance with regulations.

Special caution should be taken when demonstrating machinery or equipment that has moving parts, or any product that is potentially dangerous. Demonstrations should be conducted only by qualified personnel.

Exhibitors should establish a minimum setback of 3ft and/or install hazard barriers as necessary to prevent injury to spectators.

The aisles must not be obstructed at any time. Each exhibitor has the responsibility to ensure proper traffic flow through the entire show.

Do not place your demonstration areas on the aisle line of your exhibit if you expect many people to congregate at one time. Should spectators interfere with normal traffic flow in the aisle, Show Management will request that you limit, relocate, or eliminate the presentation.

General Rules & Guidelines cont'd

Freight Handling Jurisdiction

Shepard Exposition Services (SES) has the responsibility of receiving and handling all exhibit materials and empty crates. It is their responsibility to manage docks and schedule vehicles for the smooth and efficient move-in and move-out of the exhibition.

No crates, packing material, wooden boxes, or other highly combustible materials may be stored in exhibit halls, meeting rooms or fire exit areas.

Any freight requiring a pallet, forklift, crane or other motorized equipment must be managed by the official show contractor, Shepard Exposition Services.

Exhibitors may carry in display materials by hand or by two-wheeled dolly.

The Georgia World Congress Center will have complete control of the loading docks at all times. If you wish to unload or load, you must report to the marshaling trailer. Do not proceed to the dock until instructed to do so. Vehicles must not be left unattended at the loading areas. Any unattended vehicles will be towed away at owner's expense.

Shepard Exposition Services will not be responsible for any material they do not handle. Full details and information are outlined in ExhibitorPro.

Flammable, Combustible, and Toxic Materials

Under no circumstances will combustible oils or gases be permitted in the exhibit hall aisles. Exits must be kept free of obstructions at all times.

All drapes, curtains, table coverings, skirts, carpet and any materials used in exhibits must be flame retardant.

Artificial plants and flowers must only be used for booth dressing. Silk-type flowers are acceptable, providing they are fireproof or have been treated and marked as such.

Further information on venue specific fire safety and environment regulations can be found within the venue rules.

Flammable liquids and substances must be stored safely and separately from waste or other risk areas.

Gratuities

Tipping is expressly prohibited. This includes such practices as giving money, merchandise or other special consideration for services rendered. Any attempt to solicit gratuity by an employee for any service should be reported immediately to The Wire Association International and Shepard Exposition Services.

General Rules & Guidelines cont'd

Good Neighbor Policy

All exhibitors with island or split-island booths must contact floormanager@wirenet.org if your booth design will be utilizing an Enclosure or Full-length Wall (over 8' 3' high) (enclosure/walls made of opaque materials without sight/visibility to surrounding booths). This policy is meant to communicate to our exhibitors any potential sight-line problems prior to the show when corrective action can take place.

No advertising or logos should be visible directly overlooking neighboring booths, including freestanding banners, flags, signs or the back or side (over 8 ft) of your booth space.

Grievances

Craftsmen at all levels will be instructed to refrain from expressing any grievances or directly challenging the practices of any exhibitor. Exhibitors are asked to refrain from voicing labor complaints directly to craft personnel. Any questions regarding contract labor should be directed to the Interwire Floor Manager who will be visible on-site and introduced via exhibitor communications prior to the event.

Height Restrictions

Height restrictions do not apply to a piece of machinery that is regularly sold and used within the industry, except that the item must be placed so that it does not obscure the view of adjoining exhibits. Height restrictions do apply to display material.

Helium Balloons

Helium Balloons may be authorized for permanent attachment to authorized displays. Helium balloons being used for overhead display follow the same guidelines as hanging signs.

Lighting

LED backlit exhibition structures/light boxes must be dressed correctly on the back side of the display to stop any light leakage into neighboring booth spaces; the entire back side must be covered with adequate blackout material or double drape.

Booths with spotlights must ensure that they are angled correctly, so as not to impact neighboring booth spaces.

No lighting, fixtures, lighting trusses, or overhead lighting are allowed outside the defined exhibit space, including out into aisle space, and above the maximum build height for booth space.

Exhibitors intending to use hanging light systems should submit drawings to floormanager@wirenet.org for approval.

Lighting that is potentially harmful, such as lasers, ultraviolet lights or flashing or strobe lights that can trigger photosensitive epilepsy should comply with facility rules and be approved in writing by contacting floormanager@wirenet.org.

Lighting that spins, rotates, pulsates, and other specialized lighting effects should be in good taste and not interfere with neighboring Exhibitors or otherwise detract from the general atmosphere of the event.

General Rules & Guidelines cont'd

Photos, Cameras, all Recording Devices

The only circumstance where an attendee or exhibitor may use any of the above devices is either with the approval of the exhibiting company, or when recording or photographing an exhibitor's own exhibit.

Storage

The Fire Marshall prohibits the storage of empty crates and containers in the exhibit hall. Arrangements have been made with Shepard Exposition Services to store empty crates and containers.

Vehicles

Vehicles will only be permitted with WAI's approval, and detailed risk assessments. Generally, it is required that vehicles on display have no more than one fourth tank of gas. The filler cap should be sealed, and the batteries disconnected. External chargers are usually recommended for demonstration purposes. Keys should always be surrendered to WAI while participating in an exhibition or event.

Failure to comply with the appropriate guidelines will give WAI the right to request the Exhibitor to alter their exhibit prior to allowing the setup of such exhibit.

Booth Configurations

Linear Booth/ "In-Line" Booth

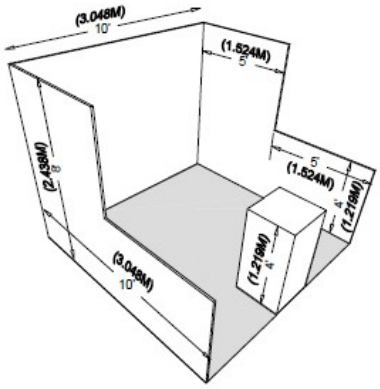

One or more standard units in a straight line. Linear Booths, also called "in-line" booths, generally have neighboring exhibitors on their immediate right and left, leaving only one side exposed to the aisle.

The standard height of 8' is allowed along the back wall and 5' from the aisle on either side. For the remaining sides (at the front 5' of the booth), the height is restricted to 4'. Space dimensions shown on floor plan are from center line of booth equipment, such as side rails and/or back drape. Exhibit structures must be constructed to allow sufficient tolerance on each side for this equipment and for utility service at rear of booth.

- Line-of-sight to your neighbor is required in the front 5' of your booth.
- Ceiling suspended banners are not permitted for this booth type.
- Logos, branding, and exhibit fixtures, components and identification signs will be permitted to a maximum height of 8' (2.44 m).
- All display fixtures over 4' (1.22 m) in height and placed within 10 lineal feet (3.05 m) of an adjoining exhibit must be confined to that area of the exhibitor's space which is at least 5' (1.52 m) from the aisle line.

Note: When three or more Linear Booths are used in combination as a single exhibit space, the 4' (1.22 m) height limitation is applied only to that portion of exhibit space which is within 10' (3.05 m) of an adjoining booth.

Perimeter Booth

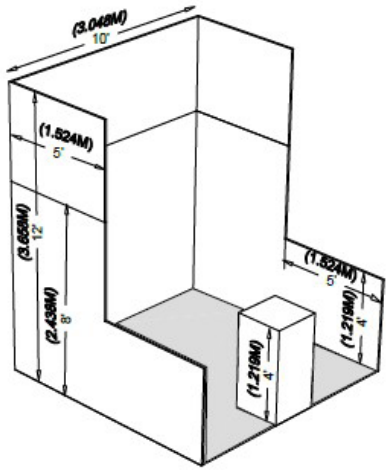

A Perimeter Booth is a Linear Booth that backs up to a wall of the exhibit facility rather than to another exhibit.

Exhibit fixtures, components and identification signs will be permitted to a maximum height of 12' (3.66 m) in perimeter-wall booths.

All display fixtures over 4' (1.22 m) in height and placed within 10 lineal feet (3.05 m) of an adjoining exhibit must be confined to that area of the exhibitor's space which is at least 5' (1.52 m) from the aisle line.

Space dimensions shown on floor plan are from the center line of booth equipment, such as side rails and/or back drape. Exhibit structures must be constructed to allow sufficient tolerance on each side for this equipment and for utility service at the rear of the booth.

Note: All guidelines for Linear Booths apply to Perimeter Booths except that the typical maximum back wall height for Perimeter Booths is 12' (3.66 m).

Booth Configurations cont'd

Island Booth

An Island Booth is an exhibit with one or more display levels in four or more standard units with aisles on all four sides.

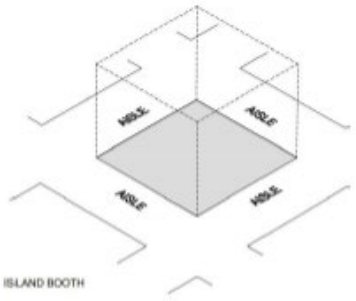

An Island Booth is typically 20' by 20' (6.10m by 6.10m) or larger, although it may be configured differently. Island booths are not be allowed at less than 400 sq ft.

Exhibit fixtures, components and identification signs will be permitted to a maximum height of 16' (4.88 m), provided written approval is received from exposition management at least 60 days prior to the show.

Hanging or suspended banners are permitted for all exhibitors with a booth space of 400 sq ft or larger and must be placed a minimum of 10' from all neighboring booths.

Plans should be submitted to floormanager@wirenet.org to gain permission to build. Rigging must only be undertaken by the official services contractor, Shepard Exposition Services (SES).

Split Island Booth

A Split Island Booth is an exhibit with four or more standard units back-to-back and split in such a manner that the backwall is common to each exhibit.

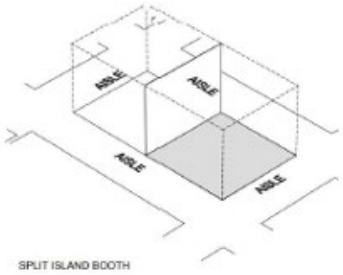

Exhibit fixtures, components and identification signs will be permitted to a maximum height of 16' (4.88 m). Depth: Since a split island booth consists of four or more standard units back-to-back and shares a common back wall with neighboring exhibits with three aisle exposures, full use of the floor plan is permitted.

- Double-deck display is not permitted in a split island booth.
- Hanging signs are permitted. See hanging sign guidelines section for complete details.

Note: Any portion of the exhibit bordering another exhibitor's booth must have the backside of that portion finished and must not carry identification signs or other copy that detracts from the adjoining exhibit.

Booth Configurations cont'd

Double-Deck Displays

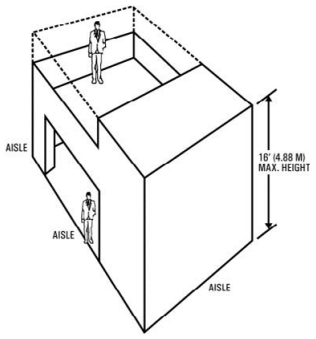

Double-deck displays will only be allowed in an island booth. This type of exhibit can have more than one display level, in four or more standard units, back-to-back with aisles on all four sides. Fixtures, components and identification signs will be permitted to a maximum height of 16' (4.88 m). Audible smoke alarms must be installed on each level, and a 10 lb. ABC fire extinguisher must be located on each level. Signs must be posted indicating the maximum number of people the structure will accommodate. The upper deck of multilevel exhibits greater than 300 sq ft in area shall have at least two remote means of egress.

Submit three (3) complete sets of any drawings or descriptions along with your request and include technical drawings showing display structure. The signature or stamp of a reviewing structural engineer indicating that the structure design is properly engineered for its proposed use must be included along with the signature of an authorized official of the exhibit building company indicating that the structure is built in compliance with the details and specifications set forth on the drawings. Maximum number of people the structure will accommodate must be indicated.

Guidelines for approval: There will be a surcharge of 50% of the total space cost for double-deck displays.

Requests must be submitted in writing and approved by The Wire Association International by emailing floormanager@wirenet.org, a minimum of 90 days in advance of the show.

Towers Layout

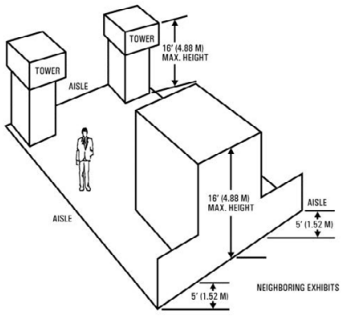

A tower is a free-standing exhibit component separate from the main exhibit fixture that is used for identification and display purposes only.

Towers will be permitted to a height and depth that correspond to the height and depth regulations for the appropriate exhibit configuration of which they are a part. For example, towers that are part of a peninsula exhibit will not exceed 16' (4.88 m) in height and will not be placed within 10 lineal feet (3.05 m) of a neighboring exhibit unless they are confined to that area of the exhibitor's space which is at least 5' (1.52 m) from the aisle line to avoid blocking the sightline from the aisle to the adjoining booth.

Guidelines for approval: Towers in excess of 12' (3.66 m) must have drawings available for inspection by exposition management, the installation and dismantling contractor, the exhibitor and governmental authority during the time the tower is being erected, exhibited and dismantled at the show site that include a signature or stamp of a reviewing structural engineer indicating that the structure designed is properly engineered for its proposed use, and a signature of an authorized official of the exhibit building company indicating that the structure is built in compliance with the details and specifications set forth on the drawings.

Hanging Signs

Hanging signs are an exhibit component suspended above an exhibit of four or more standard units back-to-back with an aisle on at least three sides for the purpose of displaying graphics or identification. The use of hanging signs will be allowed to those exhibits which are at least 400 sq ft and either an island or split island exhibit. **Advance written approval must be obtained by exhibitor and sent to floormanager@wirenet.org.**

All signs suspended from the ceiling of the Georgia World Congress Center must be hung by Shepard Exposition Services. No other firm will be allowed access to the ceiling in the Georgia World Congress Center, nor will they be allowed to bring any equipment onto the show floor at any time.

Guidelines for approval: All requests must be submitted in writing and approved by The Wire Association International, Inc., Show Management, a minimum of 60 days in advance of the show. Please submit three (3) complete sets of drawings or descriptions along with your request. Drawings should include a description of items(s) to be hung, proposed method of installation, location of hanging points, total weight of item(s) and any other pertinent technical information. Each request must be approved by the Georgia World Congress Center's Engineering Department.

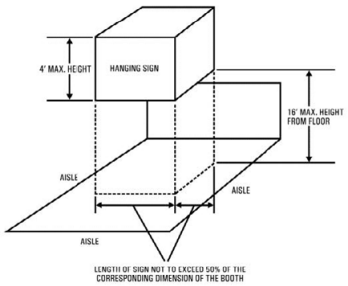

Intent: All exhibitor hanging signs will be uniformly hung with the bottom of the sign starting at 16' (4.88 m) from the floor and the top no higher than 20' (6.1 m) from the floor. This allows for the show aisle signs to be hung at a different height from the hanging signs therefore minimizing viewing interference for the attendee.
Dimensions from the top of the sign to the bottom cannot exceed 4' (1.22 m). (See diagram) and must be positioned 16' (4.88 m) from the floor to the bottom of the sign. Height of sign cannot exceed 20' (6.1 m) from the floor with a maximum hanging load of any single sign or component to 500 pounds. Permitted total length on each side of the exhibitor's space does not exceed 50% of the corresponding dimension of the booth. Exceptions are handled on an individual basis.

NOTE: *The Georgia World Congress Center's Engineering Department holds the authority to hire the services of a Registered Structural Engineer to review and approve such requests in addition to reviewing the final installation. The cost of the Registered Structural Engineer shall be at prevailing rates and paid by the exhibitor. After approval, the exhibitor will use the shipping labels provided on the ExhibitorPro portal. Signs should be sent as separate shipments and should not be shipped until you receive approval.*

Columns

If you have a column bordering your booth, contact floormanager@wirenet.org for hanging sign measurements.

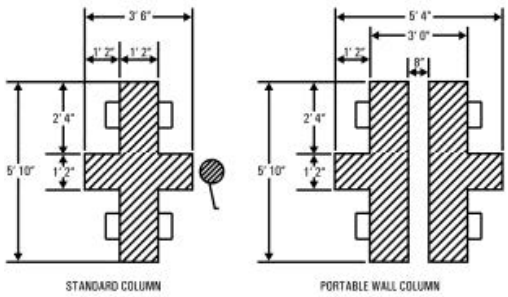

Exhibitor Appointed Contractors (EACs)

Exhibitors may employ independent contractors for the installation and dismantling of an exhibit booth. However, exhibitors must receive prior written approval by WAI. If you are an EAC or third party, you are required to register through ExhibitorPro.

Please ensure you know which role your EAC or third party is serving prior to completing the registration process; Billed services directly to the exhibitor must register as an EAC; Paid services on the exhibitor's behalf must register as a third party.

All independent contractors must conform to all target times and show set-up/break down schedules.

Exhibitors cannot employ independent contractors for any equipment handling.

Any exhibitor requiring equipment handling must employ the service of the official service contractor, Shepard Exposition Services.

EACs must check in with on-site security staff before entry to the hall.

Insurance Coverage

All exhibitors, EAC's, and third parties must show proof of the required insurance coverage as outlined on the Exhibitor's License. EAC submissions are to be uploaded through Shepard Exposition Services exhibitor platform, ExhibitorPro.

No contractor will be allowed to work on the event unless this insurance requirement is fulfilled, and a valid Certificate of Insurance (COI) is submitted. This does not include using the appointed General Service Contractor for your build.

If the EAC is hiring an independent company to perform installation and dismantling of the booth, that company must also supply a valid certificate of insurance. It is the Exhibitor's responsibility to ensure that the relevant information is passed along and adhered to when appointing a contractor for their booth build.

Separately from EAC coverage, all exhibitors shall also provide The Wire Association International, Inc. (WAI) with a certificate of commercial general liability insurance, written on an occurrence basis, issued by an insurance company authorized to transact business in the United States, including contractual liability coverage naming Exhibitor as insured and naming 'The Wire Association International, Inc.' as an additional insured.

The limit of such insurance shall be not less than $1,000,000 per occurrence, $3,000,000 aggregate. The policy shall provide that it shall not be canceled without thirty (30) days' notice to WAI. ***The certificate of such insurance shall be delivered to WAI no later than February 5, 2027.***

Exhibitors are solely responsible for insuring their own exhibit and contents thereof. Submit proof of insurance directly to the WAI Accounting Department by emailing accounting@wirenet.org.

If Exhibitor fails to provide such certificate or to maintain the insurance in force, WAI shall obtain, for the Exhibitor, such insurance at the Exhibitor's expense.

Safety

Designated Health & Safety Contact

The designated Health & Safety Contact should be the individual identified as the onsite contact or Primary Contact.

Exhibitors must ensure that all staff members, contractors, and representatives have reviewed the Site Rules and have received any appropriate onsite safety training prior to arrival at the event.

Federal, State, and Facility Guidelines

Americans with Disabilities Act (ADA)

The GWCC has manual push wheelchairs available for use by attendees at no charge while in the building. Wheelchairs are available on a first-come, first-served basis and can be found at the Information Desks in Buildings B and C.

A state issued form of ID is required for a deposit, as well as a valid phone number; the ID will be returned to the patron upon return of the wheelchair to the information desk. The FedEx Office Business Center located in the main lobby of Building B offers mobility scooters and wheelchair rentals through Scootaround. ***Make reservations with Scootaround by calling 1-855-563-9176.***

Non-Smoking Policy

Smoking, including the use of e-cigarettes, is not permitted anywhere within the Georgia World Congress Center. Smoking outside the building is permitted, if it takes place at least 25 feet from any entrance doors to the facility. Covered smoking areas have been provided for contractor use during move-in and move-out on the loading docks in designated areas.

Report an issue

Any unsafe condition or activity should be reported immediately to the Georgia World Congress Center Authority Department of Public Safety or Georgia World Congress Center Authority Administration at 404-223-4911. Any conduct detrimental to the safe and proper operation of an event, abusive language, threats, assault, vandalism and all other inappropriate actions will result in immediate removal from the premises or arrest and prosecution as appropriate.

Safety cont'd

Emergencies

Emergencies of any nature should be reported immediately to the GWCCA Georgia World Congress Center (GWCCA) Department of Public Safety at 404-223-4911 who will coordinate any required response from outside law enforcement and emergency response agencies. The GWCCA Department of Public Safety is open 24 hours a day and patrol all building perimeters, parking decks, exterior grounds and interior public areas.

Fire Codes

Exhibitors must comply with, and all exhibits and materials must meet, the requirements and regulations of the Atlanta Bureau of Fire Services.

Basic Fire Code Regulations: The National Fire Protection Association (NFPA) 101 Life Safety Code 1997 has been adopted with specific revisions and interpretations for review for events at this facility. Reference copies of the fire code are available from Georgia World Congress Center Authority Administration.

The GWCC EPP Manual provides comprehensive policies and procedures that apply to the Interwire Trade Exposition, WAI, Shepard Exposition Service, all contractors, EACs, exhibitors and other agents providing services in conjunction with the Interwire Trade Exposition. Refer to the GWCC website, gwcca.org for comprehensive policies and procedures.